Type-C to Audio + Charging Chip CH225K

Type-C to Audio + Video + Charging Chip CH225S

Type-C to Audio + Fast Charging Chip CH226S

Datasheet

Version: V1B

https://wch-ic.com

1. Overview

CH225K/225S integrates USBPD protocol on a single chip, and supports switching between data roles and power roles, and can provide the maximum charging power of 5V/1.5A (Customizable, maximum 5V/3A). Among them, CH225S also supports the expansion of DisplayPort (DP for short) video output, with built-in PD communication module, which has high integration and simplified periphery. CH226S is an upgraded version of CH225, and the charging port supports PD2.0 and BC1.2 handshake protocols, which can provide a maximum charging power of 12V/3A. The chip can be widely used in mobile phones, tablets and other Type-C charging ports to expand audio without affecting charging.

2. Function Features

- Support data role and power role switching of Type-C ports on the host side.
- Support Type-C female port forward/reverse insertion detection and automatic switching on the charging side.
- Support DP video signal output (CH225S only)
- Support analog headset and digital headset compatibility (CH225S only)
- Support PD2.0 and BC1.2 fast charging protocol communication on the charging side (CH226S only)
- High single-chip integration, streamlined peripherals, low cost
- Built-in over-voltage protection module OVA, over-temperature protection module OTA

3. Applications

- Cell Phone Expansion Audio + Charging
- Type-C Docking Station

4. Packages

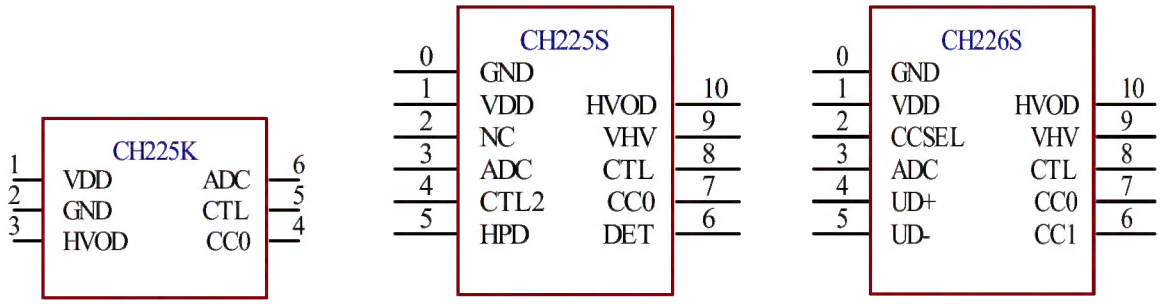

CH225K & CH225S & CH226S package pinouts

5. Pins

Pin No.			Pin Name	Type	Pin Description
225K	225S	226S			
1	1	1	VDD	Power	Power input. External 1uF decoupling capacitor, series resistance input required
2	0	0	GND	Power	Common ground. The Exposed-Pad #0 pin is a heat dissipation EPAD.
3	10	10	HVOD	High voltage open-drain output	Control the power switch between the host terminal and the charging terminal.
4	7	7	CC0	Bidirectional tri-state	Used for host-side PD protocol communication.
5	8	8	CTL	Digital output	Control the on-off of the pull-down resistor at the host end.
6	3	3	ADC	Analog input	Detecting the power supply access of the charging end
None	9	9	VHV	Power	Provide internal pull-up power supply for HVOD high voltage output pin.
	4	None	CTL2	Digital output	Control the host terminal to enter the analog earphone output mode.
	5		HPD	Analog input	DP hot plug detection pin
	6		DET	Analog input	Detect the type of connected Type-C earphone.
	None	2	CCSEL	Digital output	Reverse-inserted switching control pin at charging end
		4	UD+	Bidirectional tri-state	USB bus D+ data line, used for BC1.2 protocol communication at the charging end.
		5	UD-	Bidirectional tri-state	USB bus D- data line, used for BC1.2 protocol communication at charging end.
		6	CC1	Bidirectional tri-state	Used for charging end PD protocol communication.

6. Pin Function Description

6.1 Overview

CH225/226 host port supports PD3.0 power dual-role and data dual-role switching. When the adapter is not connected, the device connected to the host side shakes hands to make itself work in SINK/UFP mode. When connecting the adapter, shake hands with the host device to work in SRC/UFP mode. Among them, CH226S supports PD2.0 and BC1.2 fast charging and receiving protocols of charging ports, and automatically filters the voltage files provided by the adapter, which can provide 12V/3A power charging at most.

6.2 VDD Pin

The VDD pin is the input pin of the CH225/CH226 built-in parallel regulator, and the voltage of the VDD pin is about 3.6V. External series resistors are required, namely, CH225K series 1KΩ resistor and CH225S/226S series 330Ω resistor. At the same time, an external 1uF capacitor is required near this pin.

6.3 VHV/HVOD Pins

HVOD pin is an open-drain output pin, and it is pulled up to VHV pin internally. HVOD is used to control the power switch. CH225K requires an external pull-up HVOD pin.

6.4 CC0/CC1 Pins

The CC0 pin is used to communicate with the PD protocol of the device connected to the host port, and supports the switching of power supply and data roles.

The CC1 pin is used to communicate with the adapter PD protocol connected to the charging port. If it is not used, it can be grounded. Only used for CH226S.

6.5 CTL Pin

Used to control whether the CC line at the host side is connected with a 5.1K pull-down resistor.

6.6 ADC Pin

Detect the connection of the charging end adapter, and at the same time detect the effective range of the access power supply voltage. If the voltage is not in the effective range, the power switch will not be turned on.

6.7 CTL2/DET Pins

When CH225S detects that analog headphones are connected through the DET pin, it will control the host CC to be grounded through the CTL2 pin, so that the devices connected to the host will enter the analog audio output mode. If analog headphones are not compatible, both DET and CTL2 can be suspended. Only used for CH225S.

6.8 HPD Pin

DP hot plug detection pin. If the input voltage of HPD pin is greater than 2V, it is considered that the DP display is connected, and CH225S will control the host device to output DP video signals; If the input voltage of HPD pin is less than 1.2V, it is considered that the DP display has been removed, and CH225S controls the host device to stop outputting DP video signals. The HPD pin has a built-in 100K pull-down resistor. If the DP video output function is not used, the HPD pin can be suspended. Only used for CH225S.

6.9 CCSEL Pin

Control the channel selection terminal of the analog switch CH443 for the forward and reverse insertion detection of the adapter connected to the charging terminal. Only used for CH226S.

6.10 UD+/UD- Pins

UD+/UD- pin is used for communication of BC1.2 fast charging protocol. Only used for CH226S.

7. Application Reference Circuit

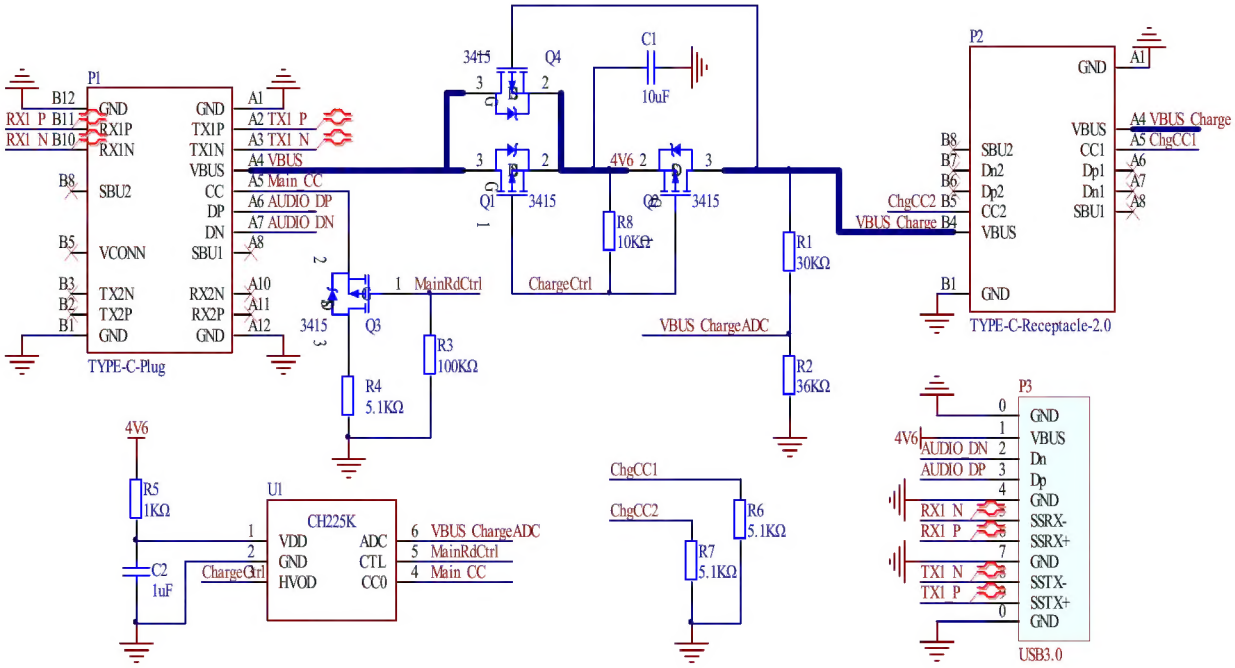

CH225K reference circuit

Note:

1)Q4 is only used to ensure that the output voltage 4V6 is equal to VBUS when the adapter is not connected. Q4 can usually be omitted.

2) The devices at the P1 host side not only support USB2.0 output, but also support the expansion of USB3.0. (USB3.0 can be disconnected)

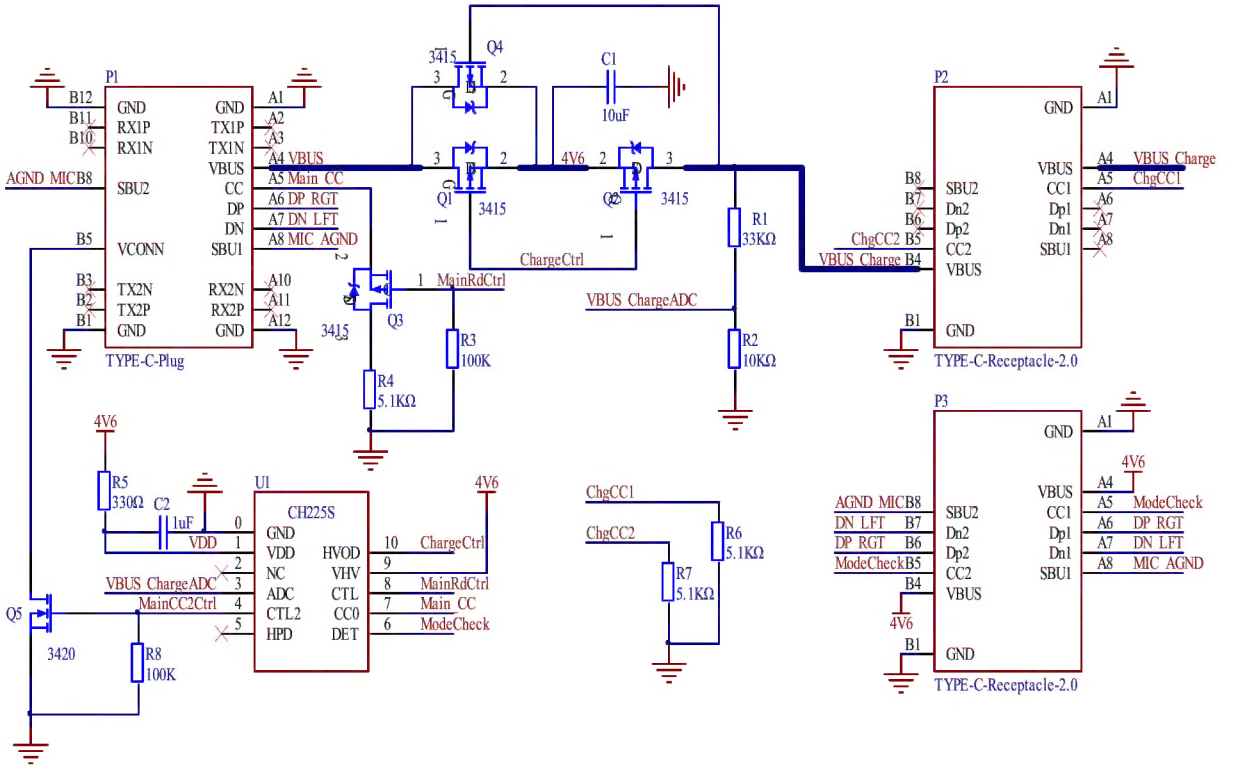

CH225S analog-digital Type-C earphone compatible reference circuit

Note:

1) *Q4 is only used to ensure that the output voltage 4V6 is equal to VBUS when the adapter is not connected. Q4 can usually be omitted.*
2) *If you don't need to use analog headphones, Q5 and R8 need not be soldered, just hang the 4 and 6 pins of the chip, and P3 doesn't need to be connected with AGND_MIC and MIC_AGND.*

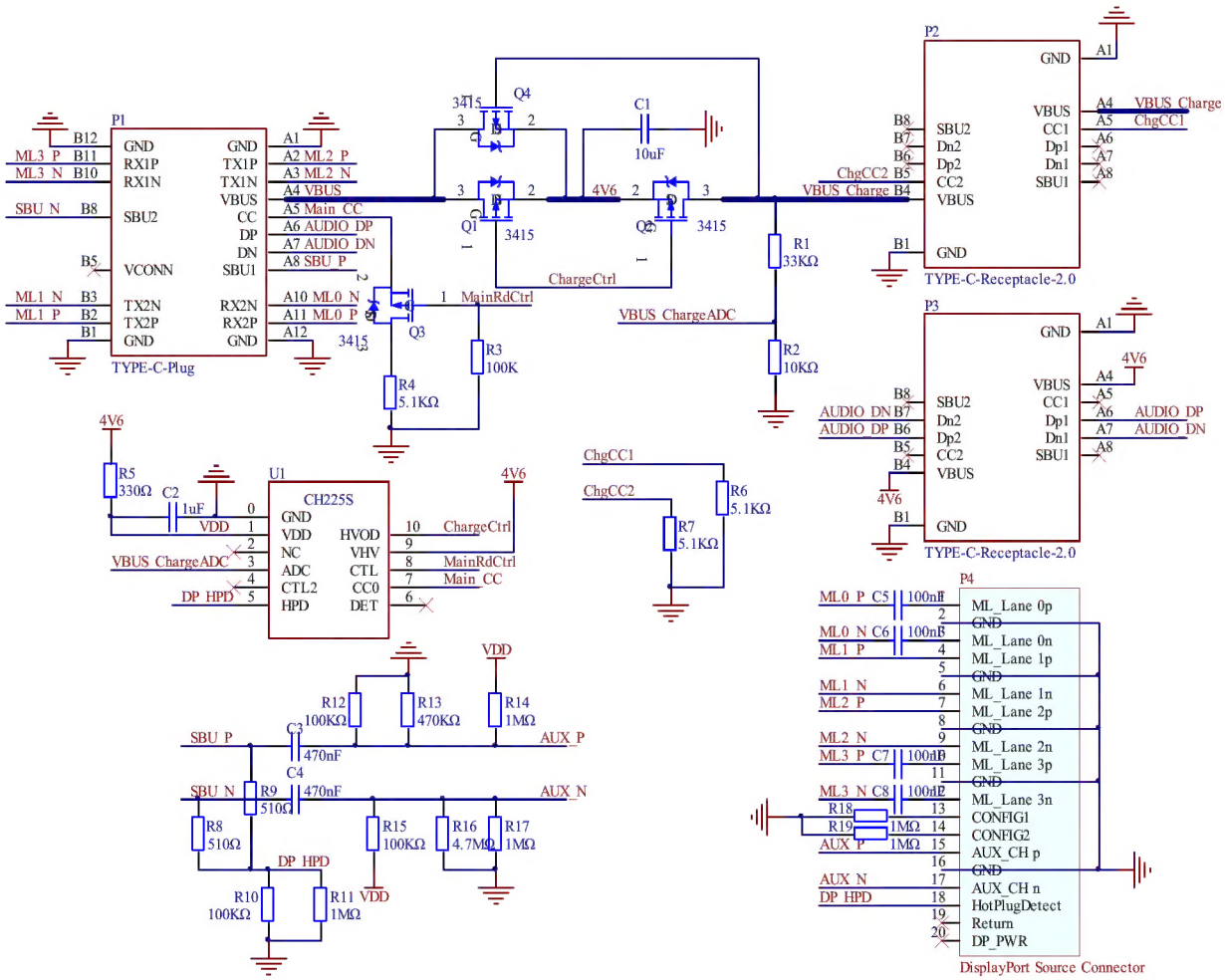

CH225S USB2.0+DP video output reference circuit

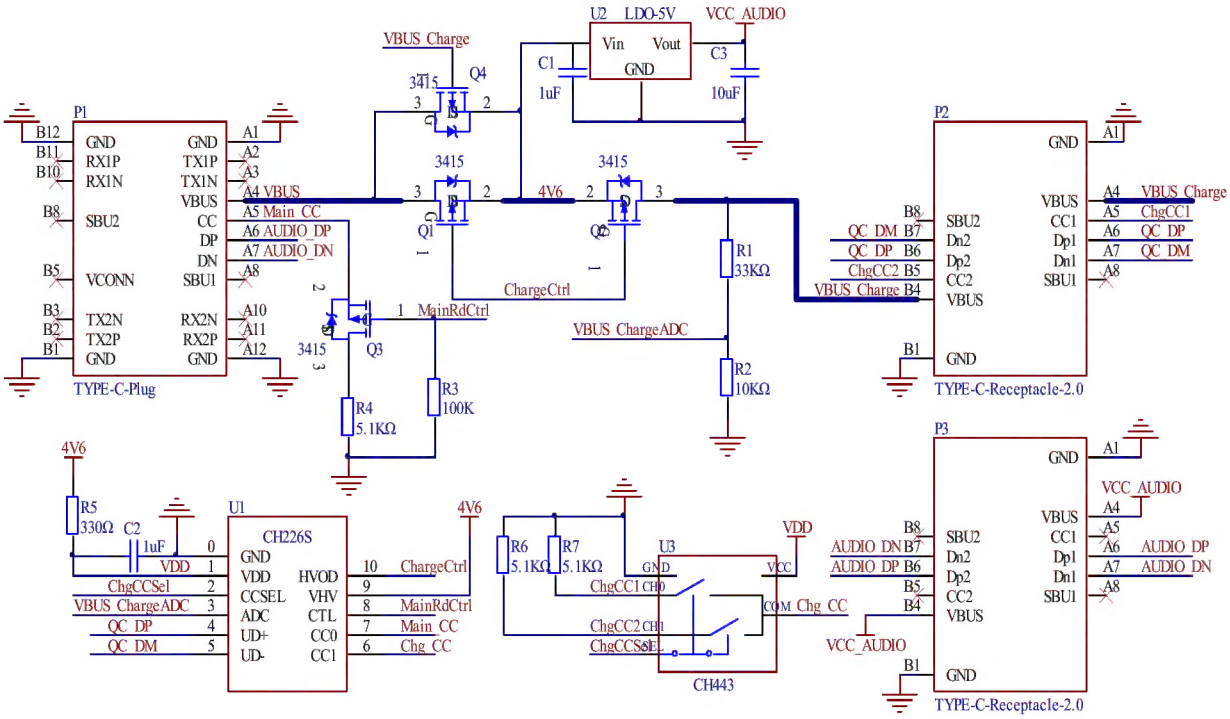

CH226S reference circuit

8. Parameters

8.1 Absolute Maximum Value (Critical or exceeding the absolute maximum value will probably cause the chip to work improperly or even be damaged)

Name	Parameter description	Min.	Max.	Unit
TA	Ambient operating temperature	-40	105	℃
TS	Ambient temperature during storage	-55	125	℃
VDD	Operating power supply voltage (VDD pin is connected to power supply and GND pin is grounded)	-0.5	5.8	V
VIOHV	The voltage on the pin (HVOD, VHV) that supports high voltage.	-0.5	13.5	V
VIOCC	Voltage on CC0, CC1 pins	-0.5	8	V
VIOUX	voltage on ADC, UD+, UD-, pin	-0.5	VDD+0.5	V
ESD	Human Body Model (HBM)		2	KV

8.2 Electrical Parameters (Test conditions: TA=25℃)

Name	Parameter description		Min.	Typ.	Max.	Unit
VDD	Operating power supply voltage		3.0		3.6	V
VLDO	Internal power regulator VDD is connected in parallel to stabilize voltage.			3.6		V
VHV	Suggested high pressure range (HVOD, VHV)		0	3~12	12.6	V
ICC6	Total power supply current at work	CH225K		0.7	1.4	mA
		CH225S/226S		1.4	6	
ILDO	The ability of internal power regulator VDD to absorb current in parallel		0		30	mA
TOTA	Reference threshold temperature of overtemperature protection module OTA		90	105	120	℃
RHVOD	Pull-up resistor from HVOD pin to VHV pin		44	54	64	KΩ
VR	Voltage threshold for power-on reset of power supply		2.2	2.4	2.6	V

9. Package Information

Package Form	Body Size		Pin Pitch		Package Description	Order Model
SOT23-6L	1.6mm	63mil	0.95mm	37mil	Small Out-Line Transistor	CH225K
ESSOP10	3.9mm	150mil	1.00mm	39mil	EPAD Shrink Small-Outline Package	CH225S
ESSOP10	3.9mm	150mil	1.00mm	39mil	EPAD Shrink Small-Outline Package	CH226S

Note: The units marked in the package information diagram are all mm (millimeter).

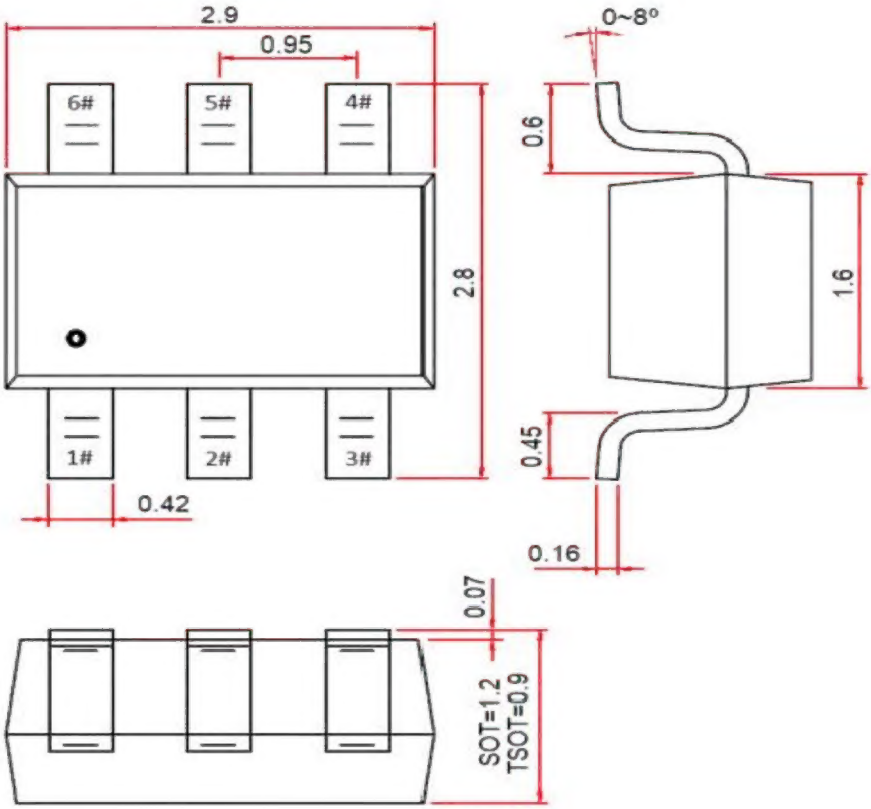

SOT23-6L Package size

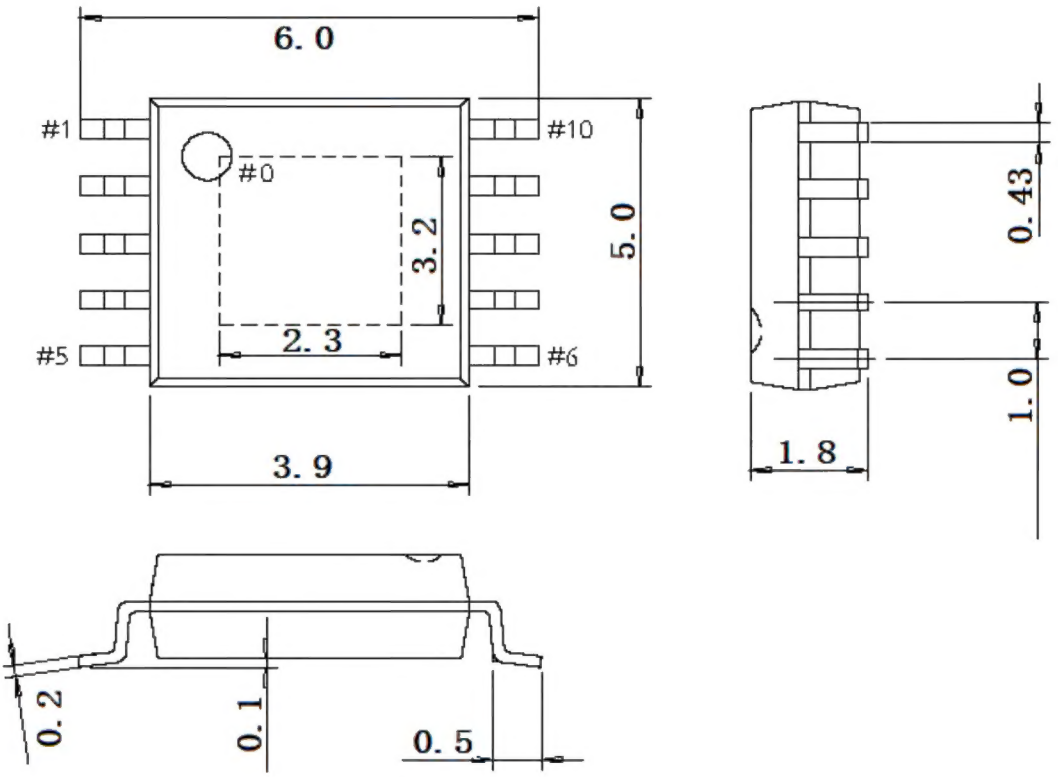

ESSOP-10 Package size